LTECH | 24V | 36W | DALI DT6 Dimmable | Constant Voltage LED Driver | IP20 | Single Colour

LM-36-24-G1D2 / ITM003011



Datasheet

06-10-2026

LTECH | 24V | 36W | DALI DT6 Dimmable | Constant Voltage LED Driver | IP20 | Single Colour



Dimming	IP Rating	Mode Out	Rated Power	Warranty
DALI-2, DT6	IP20	CV	36W	5 Years

SKU: LM-36-24-G1D2
ITM: ITM003011

Key Features:

- **Wattage:** 36W
- **Dimming Range (min / max):** 0 - 100%
- **Dimensions (W x H x L):** 43 x 30 x 210mm

Mechanical Data

Body Colour:	White	**Product Weight:**	430g
Dimensions (LxWxH):	210 x 43 x 30mm		

Electrical Data

Constant Voltage / Constant Current:	CV

Input Data

Displacement Factor:	0.95	**Input Control Connector Type:**	Bare End
Input Current:	0.26A	**Input Current Type:**	AC
Input Frequency:	50Hz - 60Hz	**Input Terminal / Connector Type:**	Bare end
Input Voltage:	220V - 240V	**Inrush Current:**	25A
Leakage Current:	0.5A	**No. of Input Terminals:**	1
Power Factor:	0.98A	**THD:**	6%

Output Data			
Max. Output Current Per Channel:	1.5A	**Min. Load:**	0W
No. of Control Channels:	2	**No. of Output Terminals:**	2
Output Current:	2A - 4.17A	**Output Current Ripple (PK-PK):**	2%
Output Current Type:	DC	**Output Terminal/Connector Type:**	Screw terminal
Output Voltage:	24V	**Output Voltage Tolerance:**	2%
Rated Output Current:	1.5A	**Rated Power:**	36W

Control Data			
Control Signal Input:	DALI-2	**Control Signal Output:**	PWM
Default PWM Frequency:	3600Hz	**Dimmable:**	Yes
Dimming Curve:	Logarithmic, Linear	**Dimming Range:**	0% - 100%
Dimming Type:	DALI-2, DT6		

Environmental Data			
Body Material:	Plastic	**Case Temperature Max. (tc):**	90°C
Ingress Protection (IP):	IP20	**Interior or Exterior Use:**	Interior
Mounting Type:	Surface Mounted	**Operating Temperature:**	-20°C - 50°C
Storage Humidity:	80%	**Storage Temperature:**	-40°C - 80°C
Working Humidity:	95%		

Protection Data			
Electrical Safety Class:	II	**Over Current Protection:**	Yes
Over Current Protection Mode:	Shut down	**Over Temperature Protection:**	Yes
Over Temperature Protection Mode:	Auto recovery	**Over Voltage Protection:**	Yes
Over Voltage Protection Mode:	Auto recovery	**Short Circuit Protection:**	Yes

Protection Data

Short Circuit Protection Mode:	Hiccup

Efficiency Data

Average Active Efficiency:	88	**Rated Life:**	100000 Hours
Standby Power Max.:	0.5W	**Standby Power Typ.:**	0.5W

Dimension Drawing

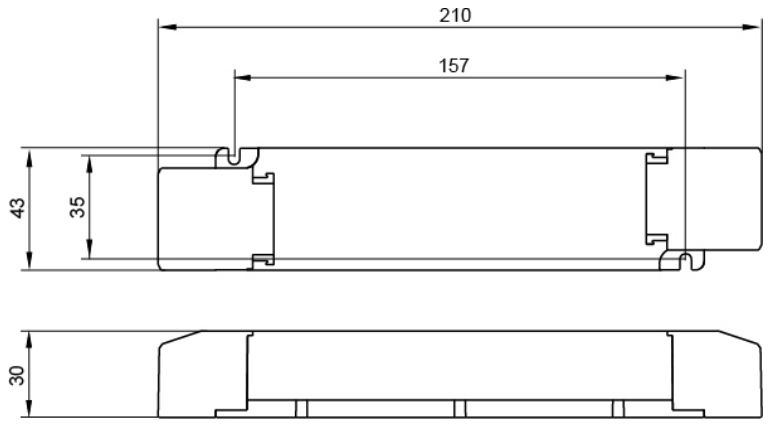

Packaging Data

Packaging Height:	33mm	**Packaging Length:**	213mm
Packaging Width:	44mm	**Packaging Weight:**	223.8g

Disclaimer

Tagra Lighting have taken reasonable care to ensure that the information in this datasheet is accurate at time of publication however it should be noted that all specifications are subject to tolerance. Descriptive specifications such as colour are subjective. Tagra Lighting reserve the right to update specifications without notice. The information in the datasheet may only be relied on by customers of Tagra Lighting in accordance with applicable terms and conditions.

Tagra Lighting is a trading name of T.R Ventures Limited, a company incorporated in England with registered number 07757720. Our registered office is Unit 2, Southfield Industrial Estate, Trafford Park, M17 1SJ.

www.tagra-lighting.co.uk

support@tagra-lighting.co.uk